Education and Sports Development

Department of Education and Sports Development
Department van Onderwys en Sport Ontwikkeling
Lefapha la Thuto le Tlhabololo ya Metshameko
NORTH WEST PROVINCE

NATIONAL SENIOR CERTIFICATE

GRADE 12

TECHNICAL SCIENCES: P1

SEPTEMBER 2019

MARKS: 150
TIME: 3 hours

This question paper consists of 15 pages including this cover page and data sheet.

Copyright reserved

INSTRUCTIONS AND INFORMATION

1. This question paper consists of NINE (9) questions.
   Answer ALL the questions in the ANSWER BOOK.

2. Start EACH question on a NEW page in the ANSWER BOOK.

3. Number the answers correctly according to the numbering system used in this question paper.

4. Leave ONE line between two subquestions, e.g. between QUESTION 2.1 and QUESTION 2.2.

5. You may use a non-programmable calculator.

6. You are advised to use the attached DATA SHEET.

7. Show ALL formulae and substitutions in ALL your calculations.

8. Round off your FINAL numerical answers to a minimum of TWO decimal places.

9. Give brief motivations, discussions, etc. where required.

10. Write neatly and legibly.

QUESTION 1 MULTIPLE-CHOICE QUESTIONS

Various options are provided as possible answers to the following questions. Choose the correct answer and write only the letter (Aï D) next to the question numbers (1.1ï 1.10) in the ANSWER BOOK**,** e.g. 1.11 D.

1.1 Which Law best describe why a driver and passenger should wear a seatbelt while driving is:

A Newtonôs First Law

B Newtonôs Second Law

C Newtonôs Third Law

D Newtonôs Law of Universal Gravitational. (2)

1.2 Which one of the following best describes an inelastic collision?

A Both momentum and kinetic energy are conserved.

B Total kinetic energy is not conserved but total linear momentum is conserved.

C Neither kinetic energy nor momentum are conserved.

D Kinetic energy is conserved but total linear momentum is not conserved. (2)

1.3 Which one of the following SI units is equivalent to Pascal (Pa)?

A $J.s^{-1}$

B $F.m^{-1}$

C $C.V^{-1}$

D $N.m^{-2}$ (2)

1.4 é é é é é é é a semiconductor material with an excess of negative charge carriers.

A Forward bias

B P-type semiconductor

C N-type semiconductor

D Reverse bias (2)

1.5 An object is released from the top of a FRICTIONLESS inclined plane, **AC**, as shown below.

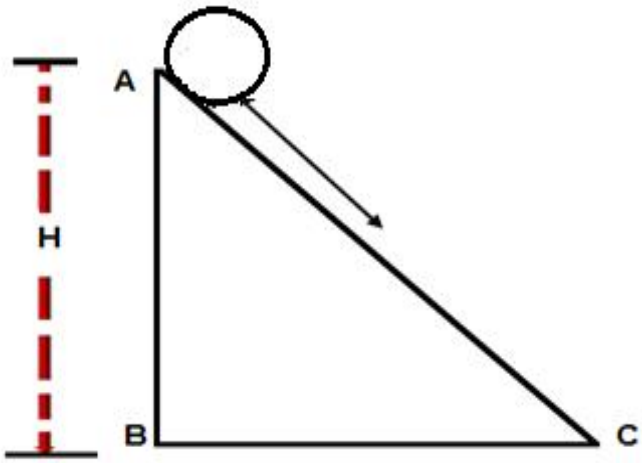

Which ONE of the following statements regarding the total mechanical energy of the object is CORRECT.

A $(E_K + E_P)_A = (E_K + E_P)_C$

B $(E_K + E_P)_A < (E_K + E_P)_C$

C (EK + EP)A > (EK + EP)C

D $(E_K + E_P)_A = - (E_K + E_P)_C$ (2)

1.6 Which one of the following is INCORRECT with reference to a 20W - 50.

A. 10W ï 30, oil has a lower viscosity when cold than 20W - 50 oil.

B. 20 indicates viscosity as rated at 0 ^{0}C.

C. 50 indicates viscosity as rated at 100 ^{0}C.

D. 10W ï 30, oil has a higher viscosity when cold than 20W - 50 oil. (2)

1.7 Heavy lifting work is often accomplished by shifting liquids in big machines. The power system of such machines can be described as:

A Reciprocating

B Pneumatic

C Hydraulic

D Hybrid (2)

1.8 Two identical light bulbs are connected in parallel, as shown in the circuit diagram below. Voltmeters $\mathbf{V_1}$ and $\mathbf{V_2}$ are connected across each light bulb.

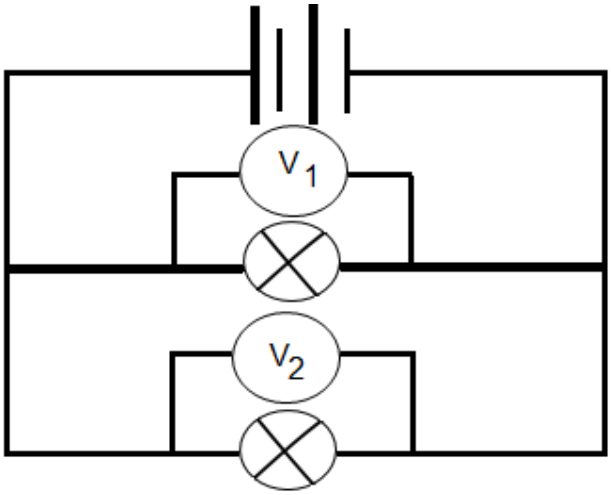

Which ONE of the following voltmeter readings is CORRECT?

A $V_1 = 2V_2$

B $V_1 = V_2$

C $V_1 = ¼ V_2$

D $V_1 = ½ V_2$ (2)

1.9 What is the value of the capacitance of a capacitor which has a voltage of 4 V and has 16 C of charge?

A 4 F

B 16 F

C 32 F

D ¼ F (2)

1.10 If the primary voltage is greater than the secondary voltage a transformer is referred to as aé é .

A AC transformer.

B step-down transformer.

C DC transformer

D step-up transformer. (2)

[20]

QUESTION 2 (Start on a new page.)

Le Roux applies a force of 5 N on a crate with a mass 4 kg to accelerate the crate over a ROUGH horizontal plane as indicated in the diagram below.

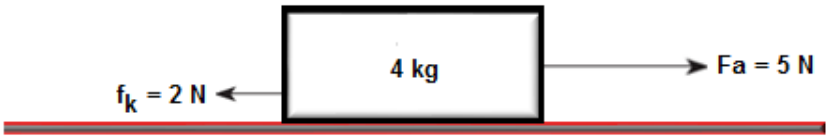

2.1 Define the term *acceleration.* (2)

2.2 Calculate the *Net force* exerted on the block. (3)

2.3 Consider the situation where Le Roux now pulls two blocks OVER a FRICTIONLESS horizontal plane to the right with a force of 12 N, the blocks are connected with a light inextensible string as indicated in the diagram below.

Ignore the effects of friction.

2.3.1 State *Newton's second law* of motion in words. (2)

2.3.2 Draw a free body diagram to indicate all the forces experienced by the 4 kg block. (4)

2.4 Calculate the:

2.4.1 Acceleration experience by the system (6)

2.4.2 Magnitude of the tension (T) . (3)

2.5 How will the effect of friction affects the acceleration of the blocks? Write down only, **INCREASES, DECREASES OR REMAIN THE SAME**. (1)

[21]

QUESTION 3 (Start on a new page.)

3.1 Study the diagrams below which show a 150 g tennis ball strikes a wall at 20 m.s^{-1}, and bounces back in the opposite direction at 16 m.s^{-1}. The tennis ball is thrown at a wall at right angle.

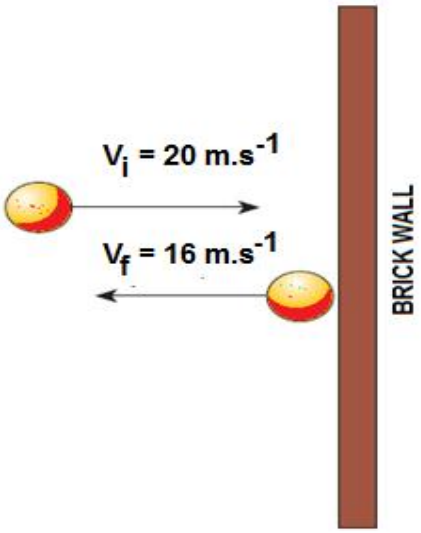

3.1.1 Define the term *impulse* in words. (2)

3.1.2 Calculate the impulse on the ball. (4)

3.2 A car of mass 1 000 kg travels west with a velocity of 33 m.s^{-1} and collides head on with a truck of mass 2 500 kg that travels with a velocity of 19 m.s^{-1} due east. After the collision, the car and the truck move together respectively.

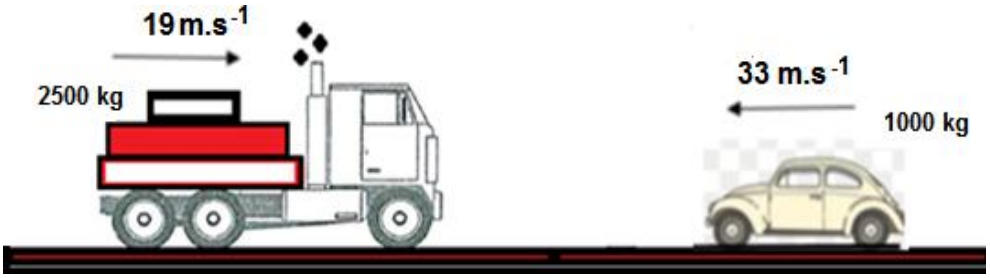

3.2.1 State the principle of *conservation of linear momentum* in words. (2)

3.2.2 Calculate the speed of the system immediately after the collision. (5)

3.2.3 By means of calculations show whether the collision is *elastic* or *inelastic*? (6)

3.2.4 The car was fitted with an airbag. Explain how the airbag reduces the fatal injuries on a driver. (3)

[22]

QUESTION 4 (Start on a new page.)

A boy uses a rope to pull a MODEL CAR on a rough surface. The rope makes an angle of 30° with the horizontal, the boy exerts a 15 N force. The MODEL CAR moves a distance of 5 m while the boy exerts the force.

The frictional force experienced by the MODEL CAR during this process is 2 N.

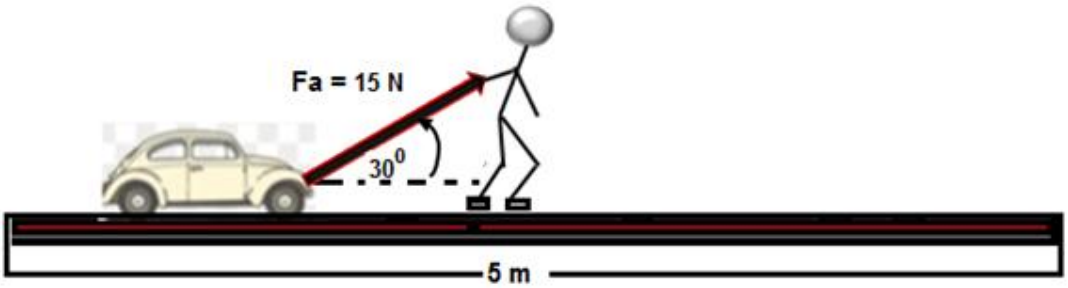

4.1 Define the term *work done* in words. (2)

4.2 Draw a free body diagram to indicate all the forces experienced by the MODEL CAR. (4)

4.3 Calculate the work done by the:

4.3.1 *Applied force* (4)

4.3.2 K*inetic frictional force* (2)

[12]

QUESTION 5 (Start on a new page.)

A small metal ball with mass 1 000 kg at a construction site is suspended from a chain with negligible mass and used to demolish a building. The metal ball is pulled sideways until the ball is 1,5 m above its lowest position (position **A**). The ball is held stationery at Point **A**, and then released to hit the building at point **B**

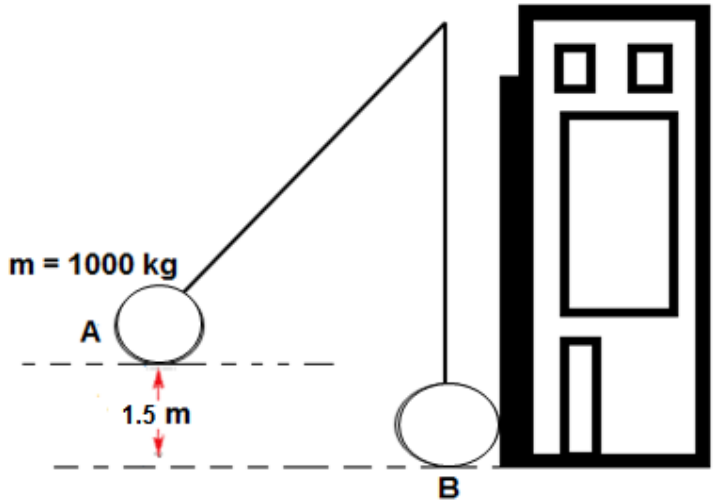

5.1 State the principle of *conservation of mechanical energy*. (2)

5.2 Calculate the *mechanical energy* of the block at point **A**. (3)

5.3 Calculate the speed of the ball at point **B**. (5)

5.4 A TRUCK used to pick up wreckage of the building drives at a constant velocity of 25 $m.s^{-1}$. The engine of the TRUCK produces a power of 40 kW.

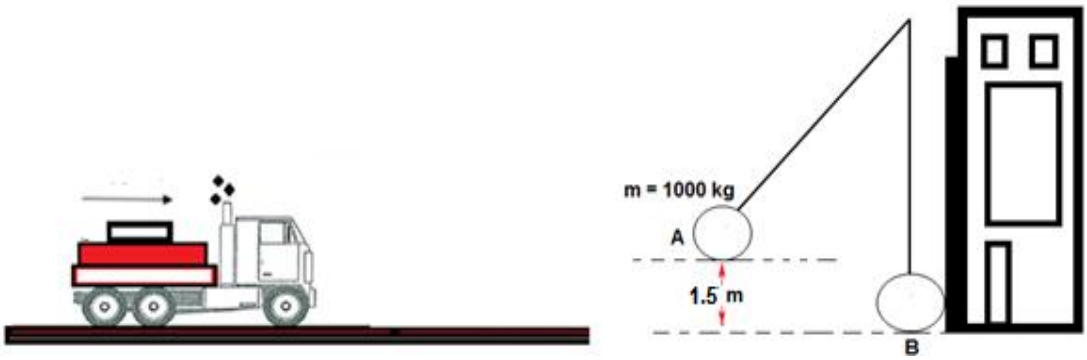

5.4.1 Define the term *power* in words. (2)

5.4.2 Calculate the force of the TRUCKõs engine. (3)

[15]

QUESTION 6 (Start on a new page.)

A compressive force causes internal stress of 1 MPa in a SPRING made of an unknown metal. The resistance area of the round SPRING is $2 \times 10^{-3}\ m^2$ and its original length is 50 mm. The force causes the round SPRING to increase by 1×10^{-3} mm.

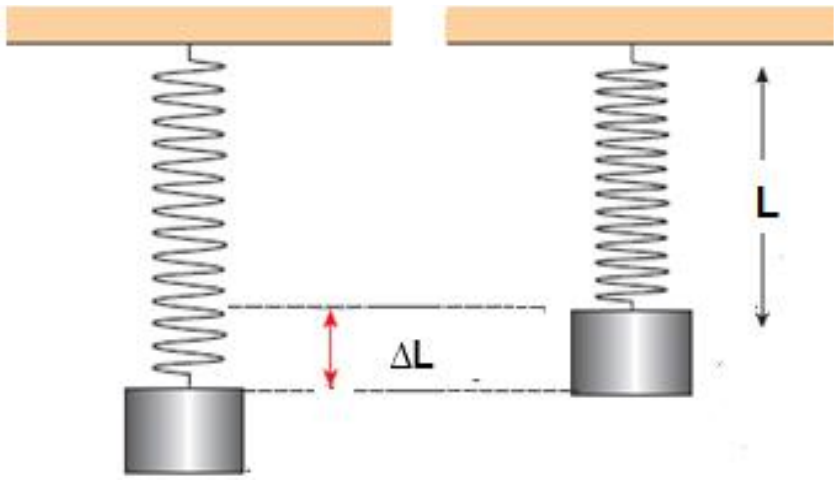

6.1 Define the term *strain* in words. (2)

6.2 State *Hooke's Law* in words. (2)

6.3 Calculate the:

6.3.1 *Force* that causes the SPRING to stretch (4)

6.3.2 *Strain* in the metal caused by the force (3)

6.3.3 *Elasticity modulus* for this metal (3)

[14]

QUESTION 7 (Start on a new page.)

Fluids are used in designing hydraulics machines because of their ability to flow. However, liquids are more preferable than gases in making hydraulics machines.

7.1 Define the term *viscosity*. (2)

7.2 What is the effect of temperature on the viscosity of liquids? (2)

7.3 A hydraulic brake system uses Pascal's law to function. A force (**F_1**) is exerted on **Piston A**, which has an area (**A_1**) of 0,5 m^2. The pressure is transmitted through the brake fluid to **Piston B**, which has an area (**A_2**) of 2 m^2 and the force (**F_2**) applied to the disc attached to the wheel is 1000 N.

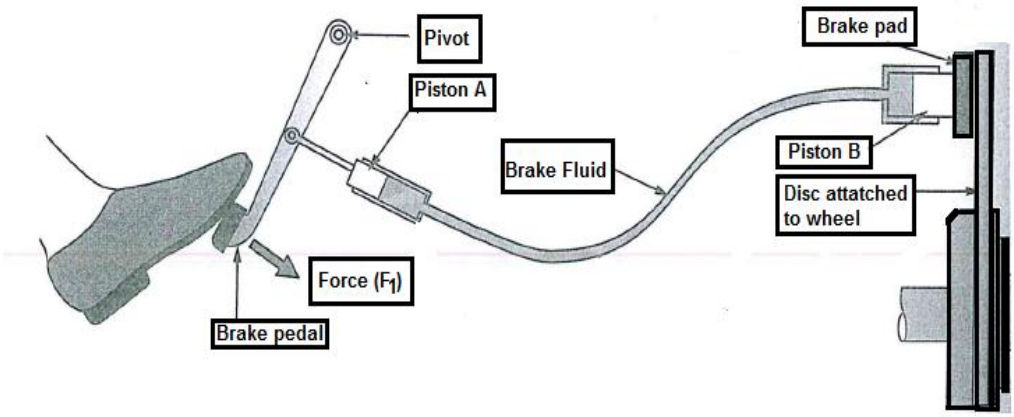

7.3.1 State *Pascal's Law* in words. (2)

7.3.2 Calculate the minimum force that must be applied to **Piston A**? (4)

7.3.3 List THREE applications of hydraulics in technology. (3

[13]

QUESTION 8 (Start on a new page.)

Small amounts of impurities can be added to silicon or germanium to make it either p-type or n-type material.

8.1 Define the term *doping.* (2)

8.2 Explain why doping is done in semiconductors**.** (2)

8.3 A certain parallel plate capacitor consists of two identical aluminium plates, each with an area 2 cm^2. The plates are separated by a distance of 0, 001 m and the type of dielectric material used is air.

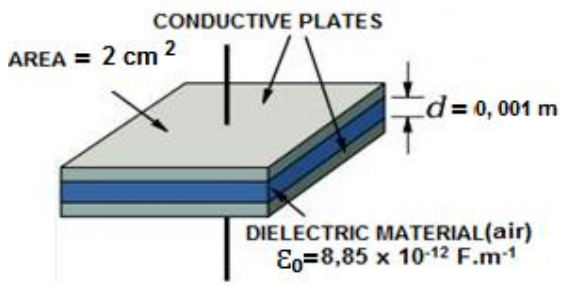

8.3.1 Define the term *capacitor*. (2)

8.3.2 Calculate the *capacitance* of the *capacitor*. (4)

8.3.3 Name THREE factors affecting capacitance. (3)

8.4 An electrical appliance with a resistance of 10 Ý takes a current of 24 A from a 240 V.

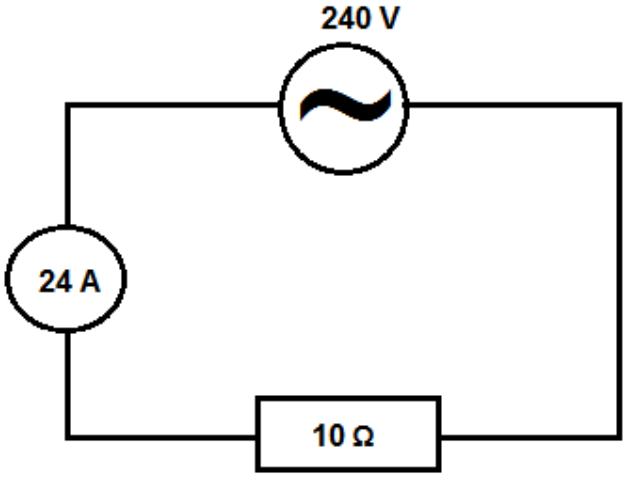

Calculate the:

8.4.1 The power rating of the electric appliance (3)

8.4.2 The energy (heat) transferred in 10 hours (4)

[20]

QUESTION 9 (Start on a new page)

A coil of wire has 500 turns. Each turn has an area of 1, 0 x 10^{-3} m^2. The coil is in a magnetic field that is perpendicular to the area of the coil. The magnetic flux changes from 0, 05 Wb to 0, 06 Wb in 0, 3 s.

9.1 State *Faraday's law of electromagnetic induction* in words. (2)

9.2 Calculate the induced *emf* in the coil. (4)

A transformer has a 200 primary turns and 100 secondary turns. The primary voltage is 240 V as show in the diagram below.

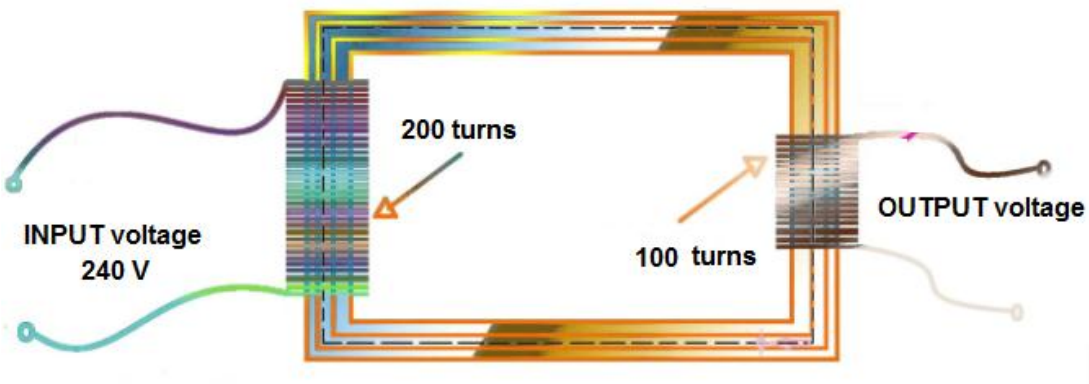

Assuming an ideal transformer.

9.3 Calculate the *secondary voltage*. (4)

9.4 The simplified sketch represents an AC generator. The main components are labelled **A**, **B**.

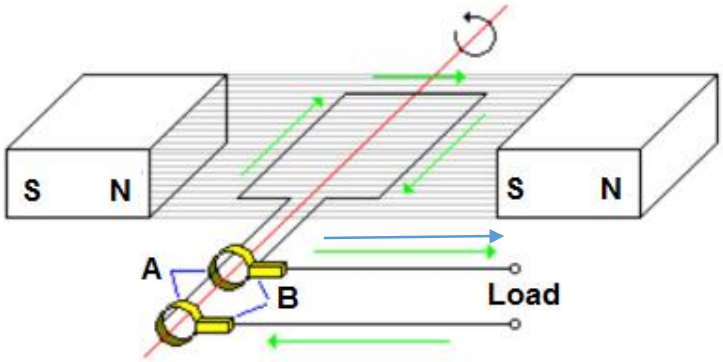

Write down the NAME of the component labelled:

9.4.1 **A** (1)

9.4.2 **B** (1)

9.4.3 What energy conversion takes place in AC generator? (1)

[13]

DATA SHEET FOR TECHNICAL SCIENCES GRADE 12 PAPER 1

TABLE 1: PHYSICAL CONSTANTS

NAME	SYMBOL	VALUE
Acceleration due to gravity	g	9,8 $m.s^{-2}$
The permittivity of dielectric constant for air.	ε_0	$8,85 \times 10^{-12}$ $F.m^{-1}$

TABLE 2: FORMULAE

FORCE

$F_{net} = ma$	$F_g = mg$ $F_g = mg$
$F_s = kx$ $f_s^{max} = \mu_s N$	$f_k = \mu_k N$

MOMENTUM

$p = mv$	
$F_{net}\Delta t = \Delta p$ $F_{net}\Delta t = \Delta p$	$\Delta p = mv_f - mv_i$
$p_{T(before)} = p_{T(after)}$ $m_1 v_{1before} + m_2 v_{2before} = m_1 v_{1after} + m_2 v_{2after}$	

WORK, ENERGY AND POWER

$W = F\Delta x \cos\theta$	$U = mgh$ or $E_P = mgh$
$K = \frac{1}{2}mv^2$ or $E_k = \frac{1}{2}mv^2$	$\Delta K = K_f - K_i$ or $\Delta E_k = E_{kf} - E_{ki}$
$M_E = E_k + E_p$	$P = \frac{W}{\Delta t}$
$P_{ave} = Fv_{ave}$	

ELASTICITY, VISCOSITY AND HYDRAULICS

$\sigma = \frac{F}{A}$ or Stress = $\frac{\text{[illegible]}}{\text{[illegible]}}$	$\dot{U} = \frac{q\ell}{L}$
$\kappa = \frac{\text{[illegible]}}{\text{[illegible]}}$	$\frac{F_1}{A_1} = \frac{F_2}{A_2}$

ELECTROSTATICS

$C = \frac{\kappa \text{[illegible]}}{d}$ and $C = \frac{\text{[illegible]}}{d}$	$E = \frac{V}{d}$
$C = \frac{Q}{V}$	

CURRENT ELECTRICITY

$R = \frac{V}{I}$	$q = I\,\Delta t$
$W = VQ$ $W = VI\,\Delta t$ $W = I^2R\,\Delta t$ $W = \frac{V^2 q t}{R}$	$P = \frac{W}{q t}$ $P = VI$ $P = I^2R$ $P = \frac{V^2}{R}$
$R_s = R_1 + R_2 + \ldots$ $\frac{1}{R_p} = \frac{1}{R_1} + \frac{1}{R_2} + \ldots$	

ELECTROMAGNETISM

$\phi = BA$	$\dot{\upsilon} = -N\frac{q\phi}{q t}$
$\frac{V_s}{V_p} = \frac{N_s}{N_p}$	